JANSON CONTROLS

Professional manufacturer in electric drive
and industry control since 2012



Energy-saving | Intelligent | Efficient

PV100 Series Solar Pumping AC Drive

Adaptable motor power: 0.4 to 37kW;
No battery required, fully powered by solar energy;
Smart protection,Automatic start/stop:
Using high power point tracking technology(MPPT);
Durable and Stable;
MODBUS RS485.

Irrigation

Product Description

PV100 series inverter is a new inverter introduced by Janson for photovoltaic water pumps. According to the market changes and customer requirements, the product usability and product performance are optimized, and the applicable voltage level and power range of the product are expanded, which can be applied to single-phase/three-phase 220V and three-phase 380V pumps.

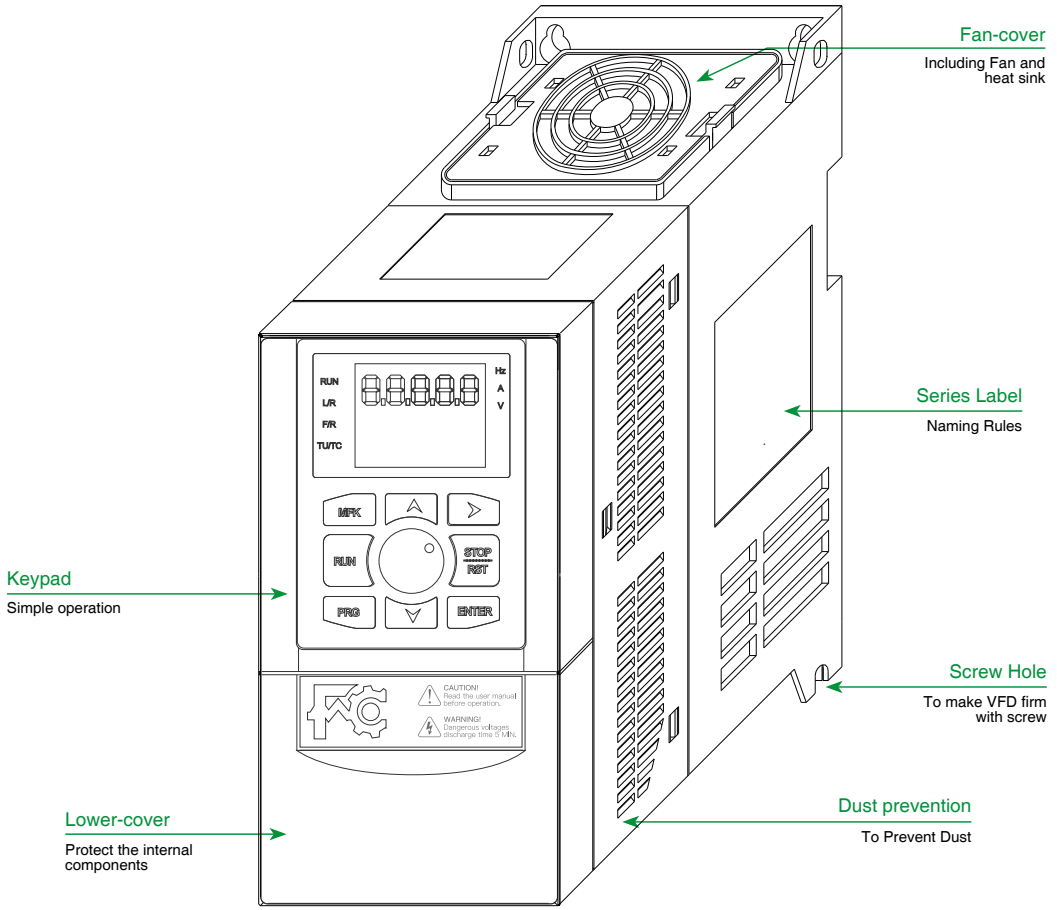

Product Feature

- Support single-phase 220V, three-phase 220V and three-phase 380V pumps with power from 0.4kW to 37KW;
- Simply connect the photovoltaic panel to the frequency converter without setting any parameters, and the photovoltaic water pump can be automatically started after being electrified;
- Standard RS485 communication interface,support Modbus RTU communication
- Advanced MPPT algorithm,Ensure that the solar power tracking efficiency can reach 99%;
- With PV overvoltage protection, PV polarity reverse alarm, over-temperature automatic derating and other protection functions, it can effectively extend the product life;

Product application system

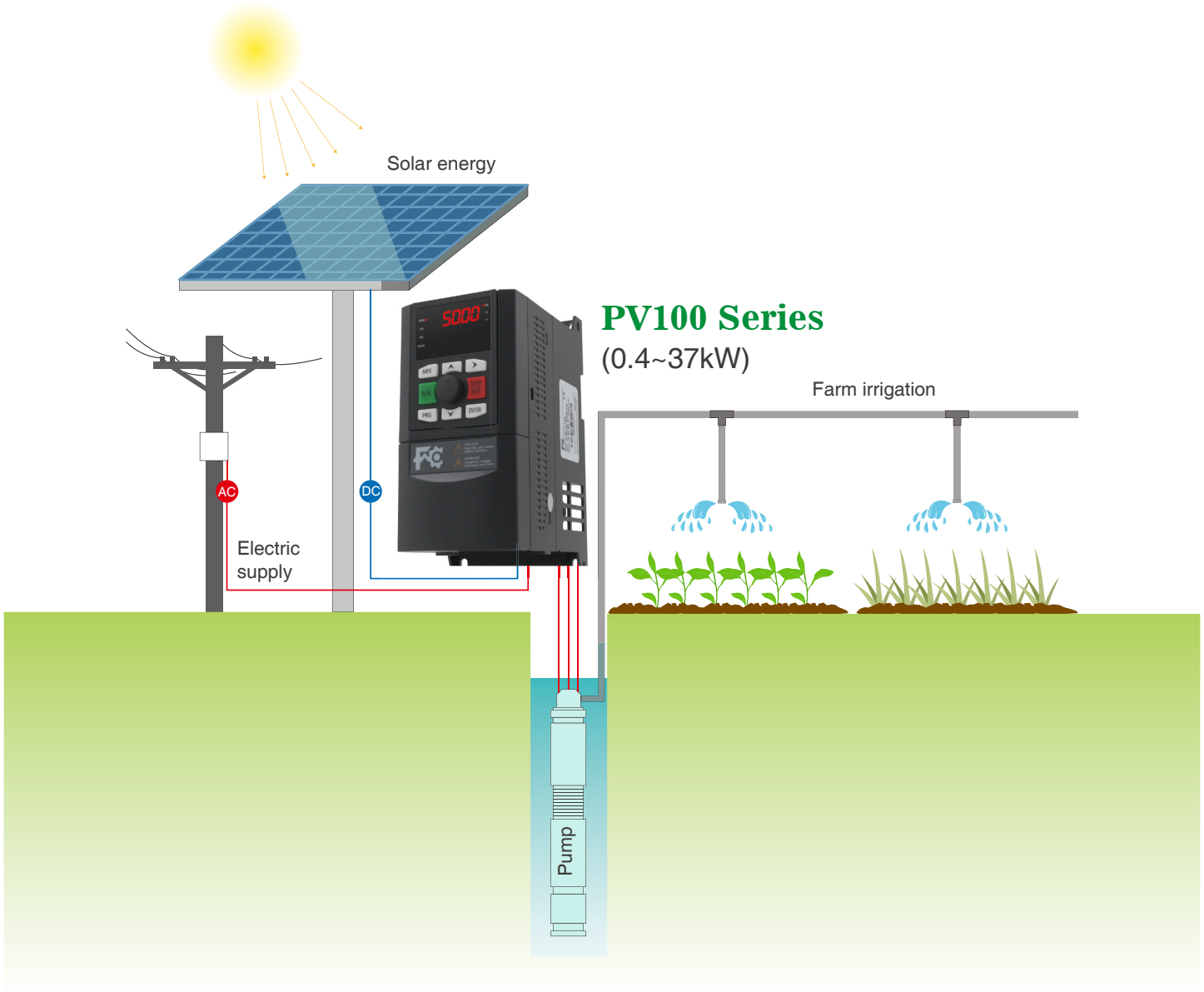

Agricultural irrigation



Desert greening



Animal husbandry



Product Selection Table

Item No.	Adaptable Motor (kW)	Input Current (A)	Output Current (A)	Rate Capacity (kVA)	W (mm)	H (mm)	D (mm)	W1 (mm)	H1 (mm)	ØD (mm)	GW (kg)
1 Phase Input and 1 Phase Output 220V (-15%~+15% Tolerance)											
PV100-2SS-0.4	0.4	6.5	4.2	0.7	89.6	197.2	139	74	187	Ø5	1.5
PV100-2SS-0.75	0.75	9.3	7.2	1.5							
PV100-2SS-1.5	1.5	15.7	10.2	3							
PV100-2SS-2.2	2.2	24	14	4	102	202	162	90	189.1	Ø5.6	3
1 Phase Input and 3 Phase Output 220V (-15%~+15% Tolerance)											
PV100-2S-0.4	0.4	6.5	2.5	0.7	89.6	197.2	139	74	187	Ø5	1.5
PV100-2S-0.75	0.75	9.3	4.2	1.5							
PV100-2S-1.5	1.5	15.7	7.5	3							
PV100-2S-2.2	2.2	24	14	4							
3 Phase Input and 3 Phase Output 220V (-15%~+15% Tolerance)											
PV100-2T-4.0	4	17	16	5.9	102	202	162	90	189.1	Ø5.6	3
PV100-2T-5.5	5.5	25	20	8.5							
PV100-2T-7.5	7.5	33	30	11	125	242.5	169.5	108.5	226	Ø6.3	3.5
3 Phase Input and 3 Phase Output 380V (-15%~+15% Tolerance)											
PV100-4T-0.75	0.75	3.4	2.5	1.5	89.6	197.2	139	74	187	Ø5	1.5
PV100-4T-1.5	1.5	5	4.2	3							
PV100-4T-2.2	2.2	5.8	5.5	4							
PV100-4T-4.0	4	13.5	9.5	5.9							
PV100-4T-5.5	5.5	19.5	14	8.9							
PV100-4T-7.5	7.5	25	18.5	11	102	202	162	90	189.1	Ø5.6	3
PV100-4T-11	11	32	25	4							
PV100-4T-15	15	40	32	21	125	242.5	169.5	108.5	226	Ø6.3	3.5
PV100-4T-18.5	18.5	47	38	24							
PV100-4T-22	22	51	45	30	165	297	206.2	147	278.5	Ø7	6
PV100-4T-30	30	70	60	39							
PV100-4T-37	37	80	75	49	225	360	231.7	206	342	Ø7	10

Product functional parameters

Model	2SS	2S	2T	4T
Ac input voltage (V)	220(-15%)-240(+10%)(1PH)		220(-15%)-240(+10%)(3PH)	380(-15%)-440(+10%)3PH)
Max. input DC voltage (V)	440	440	440	800
Starting voltage (V)	200	200	200	300
Min. operating voltage (V)	150	150	150	250
Recommended DC input voltage range (V)	200-400	200-400	200-400	300~750
Recommended MPP voltage (V)	330	330	330	550
Rated output voltage (V)	1 phase 220	3 phase 220	3 phase 220	3 phase 380
Output frequency range (HZ)	0-400			
MPPT	99%			
Installation mode	Support wall-mounted			
Ambient temperature	-10℃ -+50℃ When the temperature exceeds 40℃ , it will be reduced by 2% at 1℃ .			
Altitude	Below 1000m, after more than 1000m, it will be reduced by 1% according to the 100m reduction.			
Cooling mode	Air blast cooling			
Protection grades	IP20			

Recommended solar module configuration under standard conditions

Solar pumping inverter model	Open-circuit voltage degree of solar modul			
	37±1V		45±1V	
	Module power±5Wp	Modules per string * strings	Module power±5Wp	Modules per string * strings
PV100-2SS-0.4	250	11*1	300	9*1
PV100-2SS-0.75		11*1		
PV100-2SS-1.5		11*1		
PV100-2SS-2.2		11*1		
PV100-2S-0.4		11*1		
PV100-2S-0.75		11*1		
PV100-2S-1.5		11*1		
PV100-2S-2.2		11*1		
PV100-2T-4		11*2		9*2
PV100-2T-5.5		11*3		9*3
PV100-2T-7.5		11*4		9*4
PV100-4T-0.75		18*1		15*1
PV100-4T-1.5		18*1		15*1
PV100-4T-2.2		18*1		15*1
PV100-4T-4		20*1		16*1
PV100-4T-5.5		18*2		15*2
PV100-4T-7.5		18*2		15*2
PV100-4T-11		18*3		15*3
PV100-4T-15	250	18*4	300	15*4
PV100-4T-18.5		18*5		15*5
PV100-4T-22		18*6		15*6
PV100-4T-30		18*8		15*8
PV100-4T-37		18*9		15*9

General Wiring Diagram

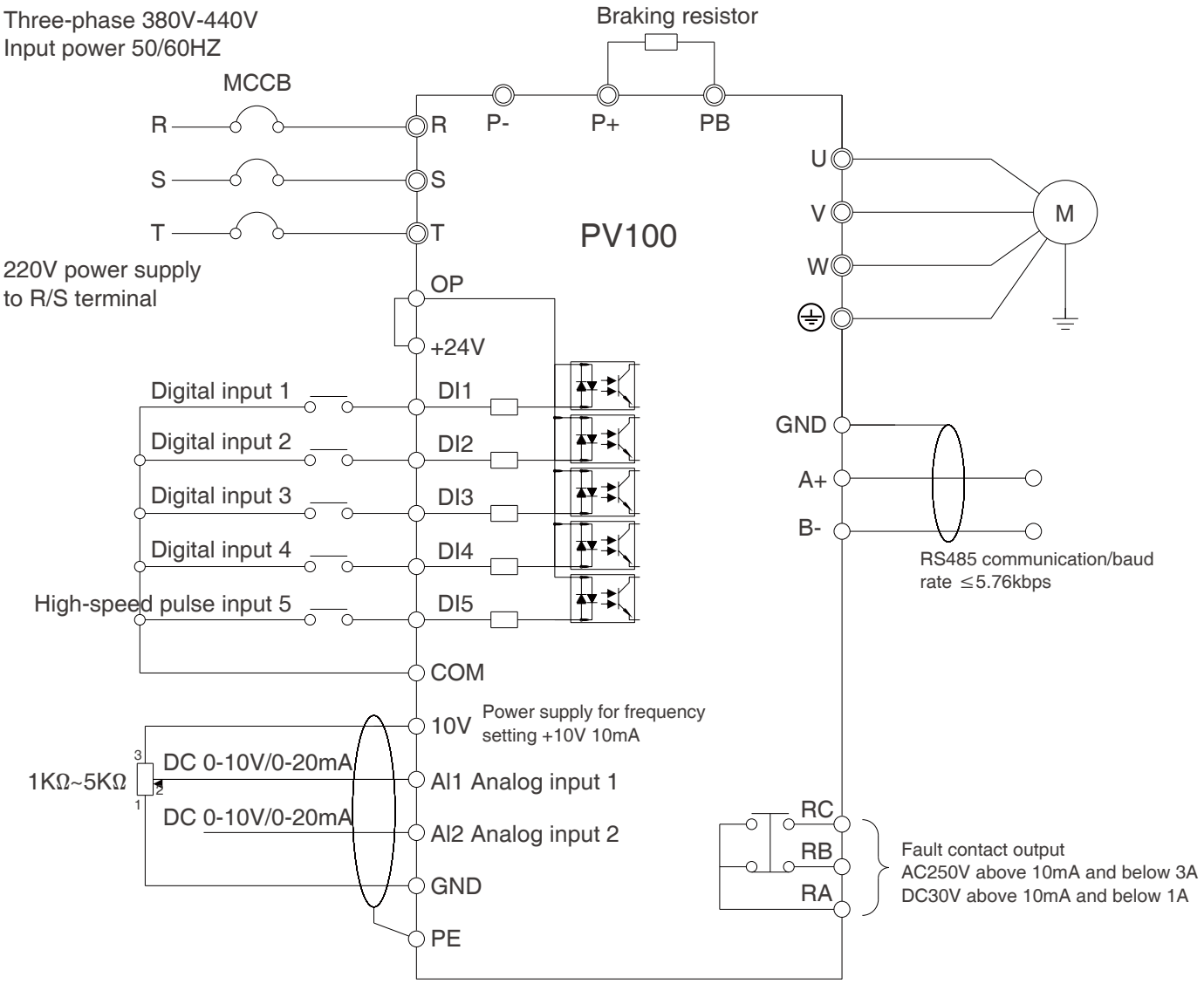

Optional Parts And Accessories



AC Input Reactor

Voltage: 220VAC~3300VAC
Current: 3A~1600A

- Prevent line power overload;
- Reduce harmonic distortion produced by AC drive;
- Restrain the surge of power supply device caused by AC drive.



AC Output Reactor

Voltage: 220VAC~3300VAC
Current: 3A~1600A

- The motor reactor limits the capacitive charging current between the AC drive and the motor cable.
- It dampens the voltage rise rate of the PWM wave outputted by the AC drive



Input Filter

Voltage: 220~1140VAC
Current: 3A~1600A

- Reduce the conduction interference of the whole system to the power grid.
- Excellent insertion attenuation performance in the range of 150kHz~30MHz.



Output Filter

Voltage: 220~1140VAC
Current: 3A~1600A

- Improve system reliability and efficiency;
- Ensure that EMC;
- No need to shield the motor electricity.

JANSON CONTROLS

Janson Controls Technologies(Shenzhen)Co.,Limited

Add: 3rd Floor, Building E, Fuxing Industrial Park, No.110, Zhangqi Road, Guixiang Community, Guanlan Street, Longhua District, Shenzhen, China
Tel:+86-0755-29611160
Http: //www.jansoncontrols.com
Email: info@jansoncontrols.com